1″ - 145 l/min

The family of 1″ diaphragm pumps, R. 1:1 for fluid transfer, produced entirely in polypropylene, maintain their performance on applications with industrial fluids, also aggressive, and in working environments with corrosive atmospheres, offering an unquestionable higher capacity.

Note: The max flow rate shown in the below graphics has been obtained by laboratory test.

Series			1000-PPB	1000-PPB dual inlet
membranes	balls	seats	P/N	P/N
EPDM	Acetal	Stainless steel AISI 316	**0E2A4/2677EAI**	**0E2A7/2677EAI**
Hytrel®	Hytrel®	Stainless steel AISI 316	**0E2A4/2677HHI**	**0E2A7/2677HHI**
NBR	Hytrel®	Stainless steel AISI 316	**0E2A4/2677NHI**	**0E2A7/2677NHI**
Santoprene™	Santoprene™	Stainless steel AISI 316	**0E2A4/2677SSI**	**0E2A7/2677SSI**
PTFE+Hytrel® *	PTFE	Stainless steel AISI 316	**0E2A4/2677TTI**	**0E2A7/2677TTI**
Max pressure			8 bar	8 bar
Max cycles per min			270 cpm	270 cpm
Litres per cycle **			0,540 l	0,540 l
Max suction lift			dry column 5 m - wet column 7,5 m	dry column 5 m - wet column 7,5 m
Max size pumpable solids			3 mm	3 mm
Max working temperature ***			65 °C	65 °C
Noise level			78 dB	78 dB
Max air consumption			1,1 m^3/min	1,1 m^3/min
Air working pressure			2 - 6 bar	2 - 6 bar
Air inlet connection			F 3/8″ G	F 3/8″ G
Air outlet connection (muffler)			F 3/4″ G	F 3/4″ G
Fluid inlet connection			ANSI 150 - DIN PN 10 - JIS 10K 1″ (25 mm) proneness to F 1.1/4″ G thread	**dual inlet** ANSI 150 - DIN PN 10 - JIS 10K 1″ (25 mm) proneness to F 1.1/4″ G thread
Fluid outlet connection			ANSI 150 - DIN PN 10 - JIS 10K 1″ (25 mm) proneness to F 1.1/4″ G thread	ANSI 150 - DIN PN 10 - JIS 10K 1″ (25 mm) proneness to F 1.1/4″ G thread
Balls for inlet and outlet				
Overall dimensions (A x B x C x D x E) mm			305 x 300 x 420 x 191 x 130	357 x 300 x 420 x 191 x 130
Screws for pump fixing			M10	M10
Packing - Weight			N° 1 m³ 0,03 kg 9,6	N° 1 m³ 0,03 kg 9,6

* With PTFE membrane flow rate is 10 % lower
** Displacement per cycle may be influenced by suction lift, fluid viscosity, air pressure, number of cycles per minute
*** The materials in contact with the fluid, and the fluid as well, can restrict the pump working temperature

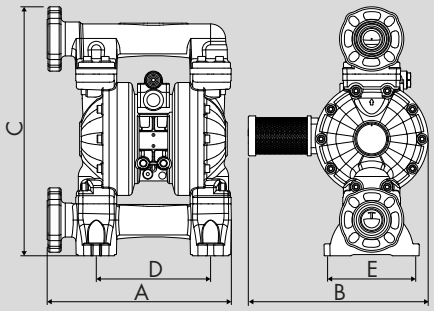

PUMP AIR FEEDING PRESSURE

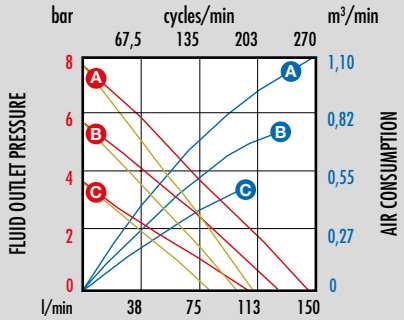

KIND OF FLUID: Water 20 °C
SAE30 oil: (ISO VG 100) 20 °C